GHOST 1

Designed by Ronni Gol

DESCRIPTION

Less, perfected. GHOST distills light and form into a sharp, singular unity - round meeting rectangular in a composition of almost industrial minimalism that surprises precisely because it does not try to.
A classic expression, stripped of everything unnecessary, guided by an unwavering belief that restraint is its own sophistication. Superb optical performance lives quietly within a compact frame, available in configurations of one or two light sources, in two sizes.

GHOST does not announce itself. It simply illuminates; with clarity, confidence, and the enduring authority of less.

Equipped with Switch Tune technology, you can set the light to 2700K or 3000K during installation.

LED | DIMMABLE | IN DOOR | IP20 | SWITCH TUNE™

LIGHT PERFORMANCE

TOTAL LIGHT OUTPUT:	660 lm
COLOR TEMPERATURE:	2700 K, 3000 K
CRI (Ra):	90
MAC ADAM:	3
BEAM ANGLE:	30°
LUMINOUS EFFICACY	78,3 lm/W
USEFUL LUMINOUS FLUX:	351,8 lm
LIGHT DIRECTION:	DLS
DIMMABLE:	Yes

ELECTRICAL SPECIFICATIONS

LED POWER CONS.:	6,00 W
DRIVER:	700042*
IP RATING:	IP20
INSULATION CLASS:	Class II
LIFESPAN:	50000 h

MECHANICAL SPECIFICATIONS

MATERIAL(S):	Aluminium, Acrylic
FINISH:	Anodized, Painted**
COLOR:	Black, Brass, Rose Gold, Titanium, White
DIMENSIONS:	W110 x D110 x H58
WEIGHT:	0,6 kg
TYPE:	Ceiling lamp / Downlight
ENVIRONMENT:	Indoor
LIGHT SOURCE:	Integrated LED
INSTALLATION:	Recessed Mounted

SUSTAINABILITY & COMPLIANCE

ENERGY EFFICIENCY:	CLASS G
CERTIFICATIONS:	CE
WARRANTY PERIOD:	7 years
MAINTENENCE:	The driver can be replaced by a qualified electrician.

* Integrated, Triac Dimming, Constant Current (CC)
** Corrosion resistance is ensured for the painted models (black and white).

To ensure ongoing improvements in quality and performance, product specifications may change without prior notice. We aim to present images and colours as accurately as possible, though variations can occur due to lighting and screen settings. Images are for general reference and may not show all details. Cables and electrical components may be intentionally left out for visual clarity.

LIGHT·POINT
COPENHAGEN

GHOST 1

Designed by Ronni Gol

COLOR OPTIONS

COLOR: White
MATERIAL: Aluminium (Painted)
ARTICLE NR: 270840
EAN NR: 5711389708405

COLOR: Black
MATERIAL: Aluminium (Painted)
ARTICLE NR: 270841
EAN NR: 5711389708412

COLOR: Rose Gold
MATERIAL: Aluminium (Anodized)
ARTICLE NR: 270842
EAN NR: 5711389708429

COLOR: Titanium
MATERIAL: Aluminium (Anodized)
ARTICLE NR: 270843
EAN NR: 5711389708436

COLOR: Brass
MATERIAL: Aluminium (Anodized)
ARTICLE NR: 270844
EAN NR: 5711389708443

DIMENSIONS

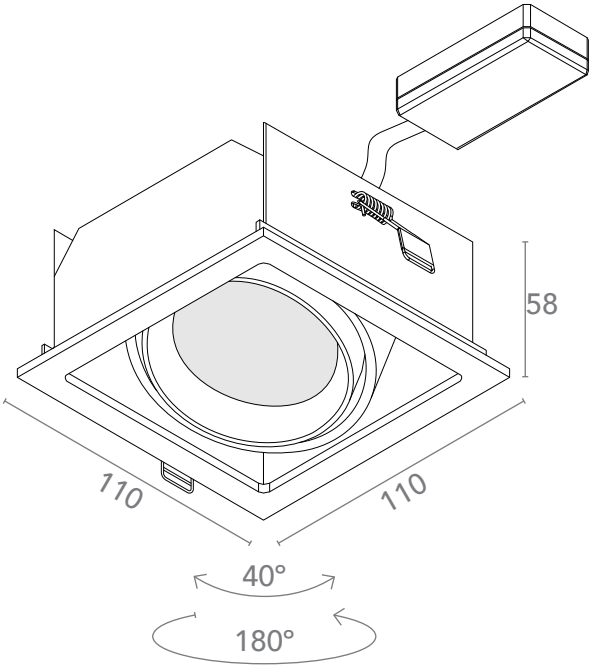

*all dimensions are in mm

REFERENCE

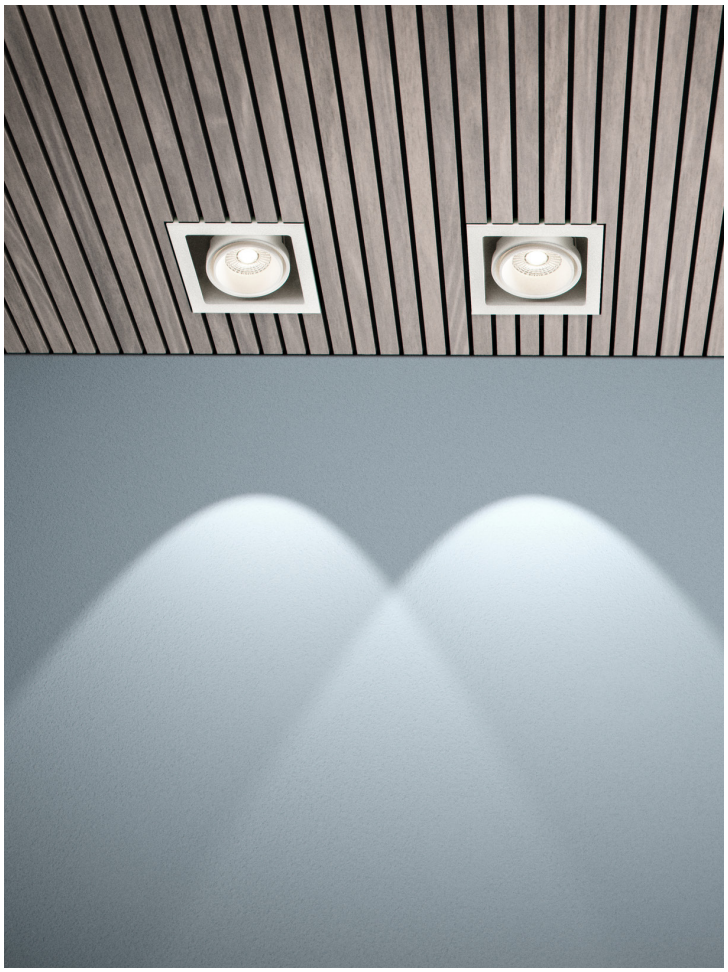

To ensure ongoing improvements in quality and performance, product specifications may change without prior notice. We aim to present images and colours as accurately as possible, though variations can occur due to lighting and screen settings. Images are for general reference and may not show all details. Cables and electrical components may be intentionally left out for visual clarity.

LIGHT·POINT
COPENHAGEN